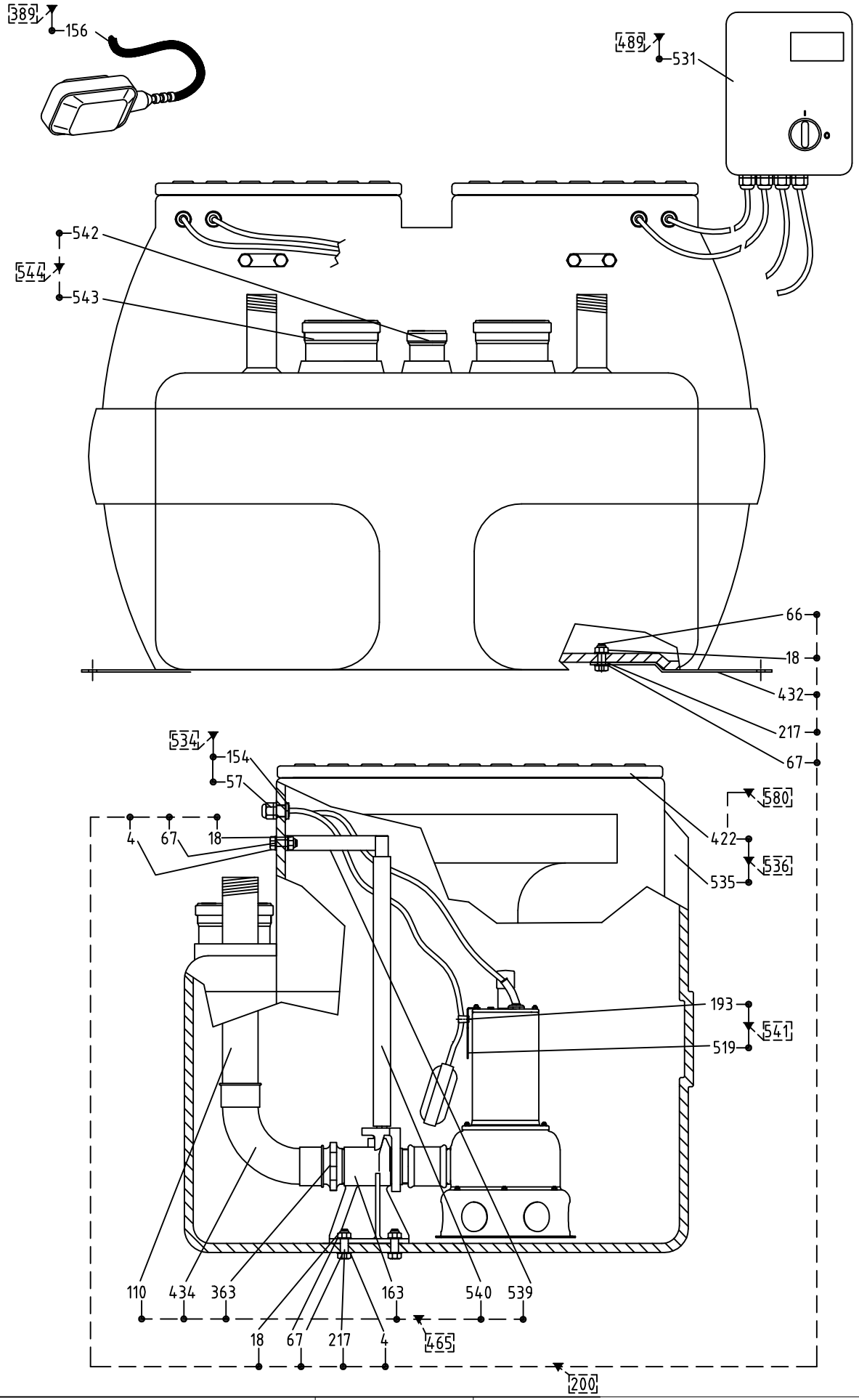

Pentair Water Italy S.r.l. Via Masaccio,13 56010 Lugnano (PI) ITALY	Drawn R.De Ieso	Title VACUSYSTEM VS500		Sheet 1 of 1
	Approved -	Date (dd/mm/yy) 14.10.2010	Filename DR100026_01	Dwg # DR100026

This drawing is the absolute property of Pentair Water Italy S.r.l. It may not be reproduced in any form without the written permission of Pentair Water Italy S.r.l.